LAB GROWN DIAMOND

GCAL LG362516116

September 17, 2026

IDENTIFICATION DATA

Gemprint® *The fingerprint system for diamonds®*

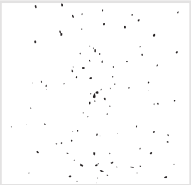

ID No. GCS1-180467

Gemprint is the unique optical fingerprint of your lab grown diamond. This patented technology is positive, forensic identification. Protect your investment and receive discounts up to 10% off your annual insurance premiums.

Register your diamond at Gemprint.com

Laser Inscription

Illustration depicts approx. girdle appearance

Actual Size

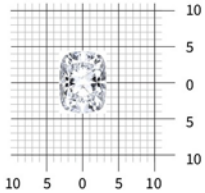

8.55 x 6.51 x 4.76 millimeters (mm)

Proportion Diagram

Optical scanning technology measures each facet and angle to produce an accurate, to-scale diagram of this lab grown diamond.

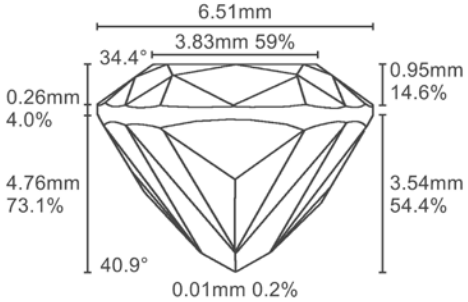

PHOTOMICROGRAPHS

Actual photographs of the crown (top) and pavilion (bottom) of this lab grown diamond photographed at magnifications up to 10x. View hi-res photos at https://www.gcalusa.com/c/362516116

Clarity Characteristics and Locations

LIGHT PERFORMANCE PROFILE

Optical Brilliance — Excellent

Optical Brilliance is the overall return of white light to the viewer. It is measured to the thousandth decimal place and is represented in this image. The white areas indicate light return / brilliance, and the dark-blue areas indicate light loss.

Optical Symmetry — Excellent

Optical Symmetry is visualized in this photograph of your lab grown diamond taken in a specific colored lighting environment. The evenness of the pattern illustrates the precision and uniformity of facet shapes and alignment.

GCAL BY SARINE

GCAL by Sarine Certificate Number
LG362516116

Scan QR code to view details of this lab grown diamond, grading scales, and to download a PDF of this certificate or go to https://www.gcalusa.com/c/362516116

4Cs GRADING

Carat Weight	**2.08**
Color	**D**
Clarity	**IF**
Cut	**Ideal**

Shape and Cutting Style	**Cushion Brilliant**
Measurements	**8.55 x 6.51 x 4.76 mm**
Polish	**Excellent**
Physical Symmetry	**Excellent**
Optical Brilliance	**Excellent**
Optical Symmetry	**Excellent**
Table %	**59%**
Depth %	**73.1%**
Girdle	**Sl. Thick to Thick, Faceted**
Culet	**None**
Fluorescence	**None**
Inscription	**GCAL LG362516116**
Growth Method	**HPHT**

This lab grown diamond was created by the HPHT (High Pressure High Temperature) method, and has the same chemical, physical and optical properties as a mined diamond.

The specifications noted in this certificate are accurate within recognized gemological tolerances. We stand behind our grading with a 4Cs Consumer Guarantee. Kindly see additional details, including the limitations of the guarantee, at https://www.gcalusa.com.

GCAL BY SARINE CONSUMER 4CS GRADING GUARANTEE

GCAL BY SARINE

GCALUSA.com T +1 212-869-8985

Headquarters
580 fifth Ave, Flr. 27
New York, NY 10036

Laboratories
New York, USA
Surat, INDIA

© 2024 GCAL USA LLC. All rights reserved.

DIAMOND SHAPES

Round | Princess | Emerald | Asscher | Marquise | Oval | Radiant | Pear | Heart | Cushion

CARAT WEIGHT SIZES

Carat Weight	2.50	2.00	1.50	1.00	0.75	0.50
Approx. Size	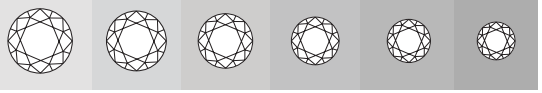					
Diameter	8.60mm	8.00mm	7.30mm	6.40mm	5.80mm	5.10mm

DIAMOND CLARITY GRADING SCALE

FL IF	VVS1 VVS2	VS1 VS2	SI1 SI2	I1 I2 I3
FLAWLESS - INTERNALLY FL.	VERY VERY SLIGHTLY INCLUDED	VERY SLIGHTLY INCLUDED	SLIGHTLY INCLUDED	INCLUDED/PIQUE

DIAMOND COLOR GRADING SCALE

D	E	F	G	H	I	J	K	L	M	N	O	P	Q	R	S	T	U	V	W	X	Y	Z
COLORLESS			NEAR COLORLESS				FAINT			VERY LIGHT					LIGHT							

D - Z DIAMOND COLOR GRADING SCALE

DIAMOND FLUORESCENCE GRADING SCALE

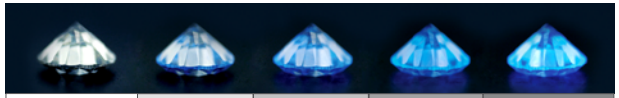

NONE	FAINT	MEDIUM	STRONG	VERY STRONG

DIAMOND POLISH & SYMMETRY GRADING SCALE

EXCELLENT	VERY GOOD	GOOD	FAIR	POOR

BRILLIANT CUT DIAGRAM

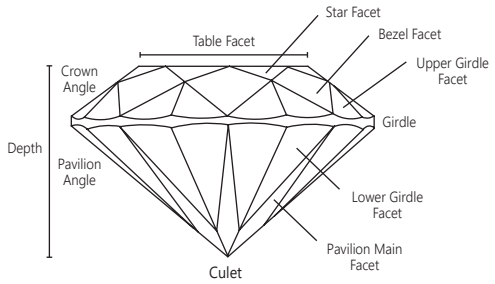

BUY WITH CONFIDENCE

GCAL BY SARINE™ 4Cs GRADING GUARANTEE

The GCAL by Sarine™ philosophy is simple: we believe consumers should feel confident about their lab grown diamond purchase, in the same way we believe experts should be accountable and stand behind their work.

This is why your lab grown diamond is protected by a zero tolerance, money-backed grading guarantee. You should know that the GCAL by Sarine™ 4Cs Grading Certificate is the only 4Cs grading certificate in the world that comes with a guarantee that ensures the accuracy of the certified lab grown diamonds' weight and quality grades. If the carat weight or any of the cut, color, or clarity grades provided in this GCAL by Sarine™ 4Cs Grading Certificate is lower than the weight or quality grade of your certified lab grown diamond, GCAL by Sarine™ will reimburse you the difference between what you paid for the lab grown diamond and the current fair value of an equivalent lab grown diamond in the market in which it was purchased, pursuant to the newly-established grades. Kindly see additional details, including the limitations of the guarantee, at https://www.gcalusa.com.

MISSION STATEMENT

To provide the most accurate and consistent gemological grading, with uncompromising integrity and unparalleled customer service.

CERTIFICATE VERIFICATION

You can verify the authenticity of this certificate by entering your GCAL by Sarine™ Certificate Number at https://www.gcalusa.com. You can also download a complimentary digital copy of this document to send to your insurance company.

GCAL™ BY SARINE

GUARANTEED CERTIFICATE

LAB GROWN DIAMOND

Independently Graded and Guaranteed by GCAL by Sarine™